● NB6FP

NEW MEDIUM 6 PISTON FORGED CALIPER

新中對 6 活塞鍛造卡鉗(NB6FP#458)

TECHNICAL SPECIFICATION

Piston Size	ϕ 30.23mm*2+ ϕ 34.93mm*2+ ϕ 40.45mm*2		
Piston Area	29.61 cm^2 *2	'PL' Dimension	69mm
Piston Material	Aluminum Alloy	Caliper Body	2pieces
Disc Diameter	ϕ B	Caliper Material	Aluminum Alloy Forged
Disc Thicknesses	T		
Weight(Less Pads)	3.7kg(One Side)		
Hydraulic Threads	M10*1.0		
Mounting	Radial		
centres	210mm		
offset	52.4mm		
hole ϕ	14.2mm		

PAD FAMILY(HFB6P&N6P)

Pad Area=85.98cm^2(96.43cm^2)

Pad Depth=49mm(57.2mm)

Pad Thickness=17mm(with shim ,panel thicknes 6~7mm)

Pad Weight =3.22(4pieces)

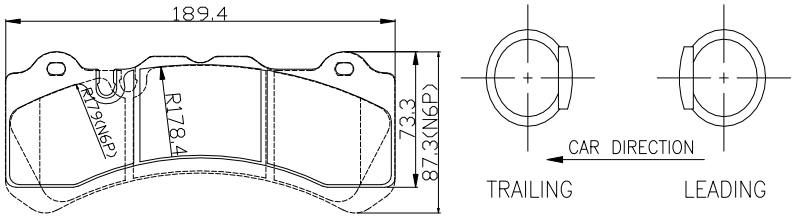

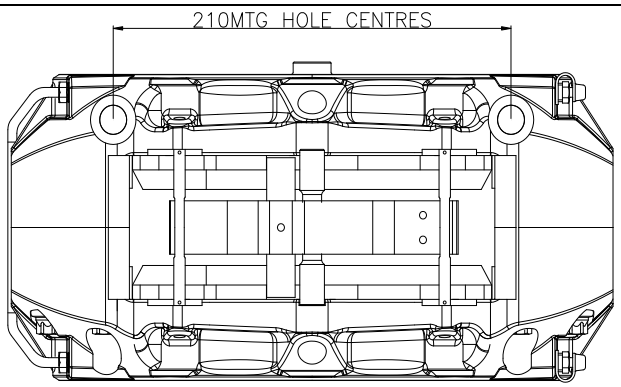

NO.	DISC øB/T	øA	øB	øC	øD	E
1	ø330/T30	388	330	279	218	94.91
2	ø355/T32	403.3	355	304.3	243	107.41
3	ø380/T32	430.3	380	331.3	268	120.91

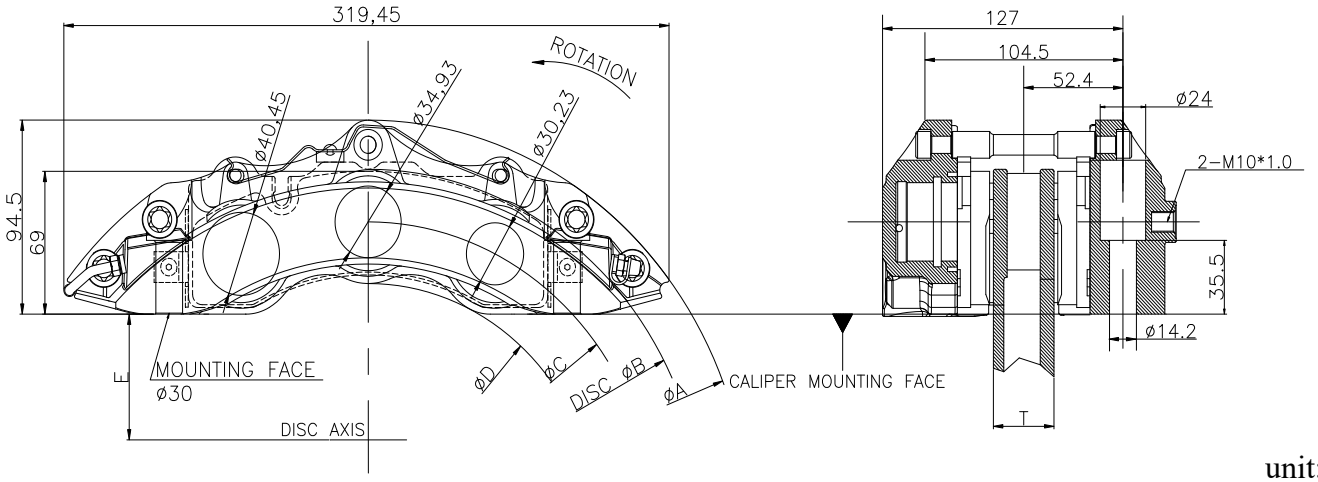

unit:mm

泓輔企業股份有限公司
Horng Fuu Industrial CO.,LTD.
http://www.horngfuu.com.tw E-mail: sa2@horngfuu.com.tw TEL: +886-3-371-0789 FAX: +886-3-371-0777